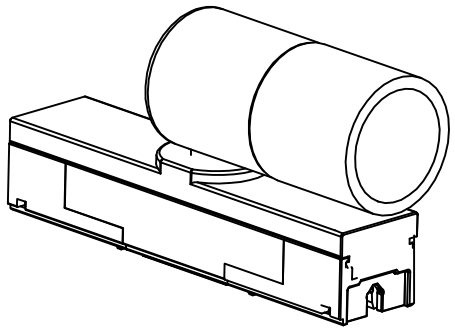

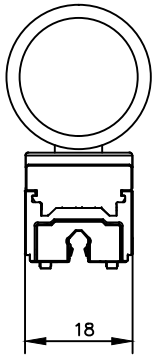

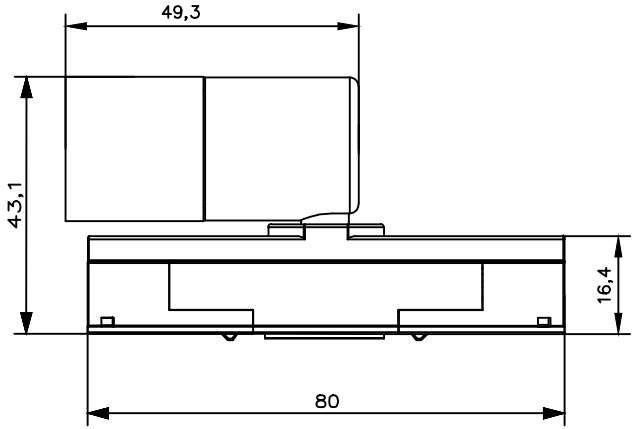

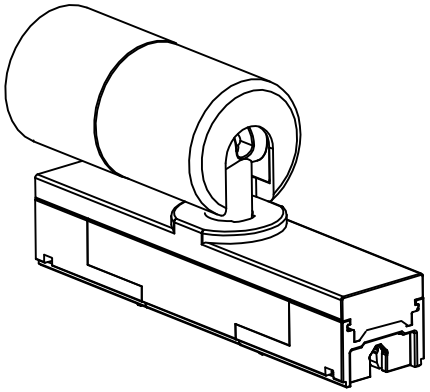

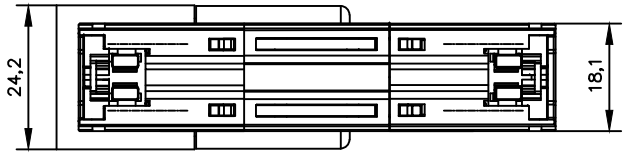

FEELUX Feelux Lighting Co., Ltd. (주) 필룩스	DRAWING TITLE	DATE	SCALE
	NMS3	2019.10.31	NONE